Thermal Pipe Systems, Inc.

WELD-TITE® PIPING SYSTEM

FOR HOT WATER
AND CHILLED WATER SERVICE

SPECIFICATIONS & DRAWINGS BOOKLET

5205 W. WOODMILL DRIVE, SUITE 33
WILMINGTON, DELAWARE 19808
PHONE: 302-999-1588
FAX: 302-999-8861
WEBSITE: www.thermalpipesystems.com

WELD-TITE PIPING SYSTEMS SPECIFICATIONS

WELD-TITE shall be used where specified for hot water, or chilled water service, using a welded joining method. Unless otherwise specified, all pipe, fittings, valves, and accessories shall conform to the requirements of ANSI B31.1, and shall be of the proper type for pressure and temperature of the heating or cooling system.

STEEL CARRIER PIPE: Carrier pipe shall be black steel per ASTM A-53 or ASTM A-106, Grade B, **[welded]** or **[seamless]**, schedule **[40]** (standard weight for 12"-24") or **[80]** (extra heavy for 10"-24").

HDPE CASING PIPE: The Casing for the Weld-Tite piping system shall be extruded, black, high density polyethylene (HDPE), manufactured in accordance with ASTM D-1248 and ASTM-3350 having a minimum wall thickness as shown on page three.

RUBBER END SEALS: Rubber end seals for insulated WELD-TITE shall be a high temperature (HT) heat resistant Ethylene Propylene Diene Monomer (EPDM) molded rubber compound. All surfaces shall be smooth and free of voids.

POLYURETHANE FOAM INSULATION: The insulation shall be Polyurethane Foam and shall meet the following specifications:

Type:	Two component urethane
Compressive Strength:	35 psi parallel min at 5% comp
Shrinkage:	None at 70°F
Free Rise Density:	2.0 to 3.0 lbs/cubic foot
Aged "K" (70°F - 72 hrs)	0.160 BTU•inch/hour•°F•ft^2
Closed Cell Content:	90%

Insulation concentricity: Carrier Pipe shall be concentric to casing pipe. The allowable maximum deviation from the centerline of the carrier pipe shall be plus or minus 1/4 inch at the casing center point and plus or minus 1/16 inch at the end seals.

FITTINGS: Fittings shall be pre-insulated by Thermal Pipe Systems, Inc. using the same insulation thickness and casing as the pipe. End seals on fittings shall be the same as used on the pipe.

FIELD JOINTS: Field joints shall be made with a HDPE joint cover, preformed polyurethane insulation half shells and heat shrink sleeve. After completion of testing, attach preformed polyurethane insulation onto the joint using 32 gauge stainless steel straps and install HDPE field joint cover over insulated joint. Apply factory supplied heat shrink sleeve circumferentially around the cover and the casing pipe overlapping seam 3". See detailed instructions on pages 8 and 9.
Note: Install split HDPE sleeve over one end of pipe prior to welding joint.

WALL PENETRATION SLEEVES: Provide where piping passes through masonry or concrete walls, floors, and roofs. Sleeves in outside walls below and above grade, in floor, or in roof slabs, shall be schedule 40 or standard weight coated black steel pipe or as specified by the Design Engineer. Space between the casing OD and the sleeve ID shall never be less than ½". Sleeves shall be held securely in proper position and location during construction. Sleeves shall be of sufficient length to pass through entire thickness of walls or slabs. Sleeves in floor slabs shall extend 2 inches above the finished floor. Refer to typical detail of wall penetration as shown. In existing concrete manholes or building walls, penetrations may be made using the "core drilling" method providing proper care is taken to drill the holes to the size needed and square to the line of the pipe.

WALL PENETRATION SEALS: All wall penetrations shall be sealed to prevent water from entering the building or manhole. The sealing material shall be as specified by the engineer.

WELD TITE APPLICATION ENGINEERING

PIPE SYSTEM DESIGN: Standard design techniques and practices for WELD-TITE shall be used. Thermal Pipe Systems, Inc. Engineering Department may provide the detailed design of the piping for each project based on the project documents and drawings provided by the Design Engineer. It is understood that the project specifications and layout drawings will specify the type of service, location of the site, temperature and pressure classifications, soil conditions, general path and elevations of the system, location and design of manholes, known obstacles, size of the carrier pipe, and the maximum permissible heat losses. It is further understood that other requirements such as the type of pipe, the location, size, and capacity of valves, traps, pumps, anchors, controls, expansion devices and special structural elements will be provided by the Design Engineer. The design provided by Thermal Pipe Systems, Inc. and their engineers for the piping will be in accordance with ANSI B31.1 and good engineering practices.

Fluid flow design will be based on Hazen-Williams formula with "C" Factor of 100, or a variation of the Euler formula for water flow.

INSULATION: Thickness of insulation for WELD-TITE pipe shall be as shown on page three.

TEMPERATURE AND PRESSURE: Weld-Tite piping system and all of its components are designed to operate up to 150psig at 250°F, plus typical surges.

DIMENSIONS AND WEIGHTS of insulated WELD-TITE piping are as shown on page three. The WELD-TITE piping may be furnished in 20 ft. and/or 40 ft. lengths.

PRE-INSULATED WELD-TITE® PIPE

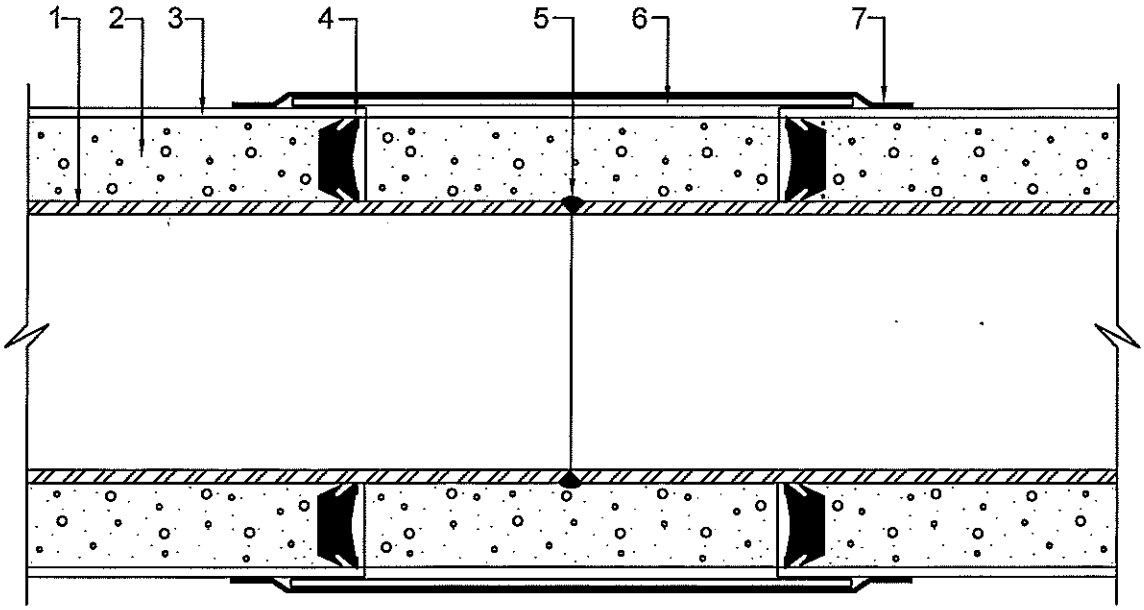

1) CARRIER: Black Steel as Specified
2) INSULATION: Polyurethane Foam
3) CASING: High Density Polyethylene (HDPE)
4) END SEAL: EPDM
5) WELD
6) CASING-TITE SLEEVE: High Density Polyethylene (HDPE)
7) CASING-TITE SEAL: Heat Shrink Sleeve

NOM. PIPE SIZE	CARRIER O.D.	CASING O.D.	THICKNESS		WEIGHT (LBS./20 FT.)
			CASING	FOAM	
1 1/2	1.90	4.53	.150	1.17	83
2	2.38	4.53	.150	0.93	101
2 1/2	2.88	6.40	.150	1.61	153
3	3.50	6.40	.150	1.30	188
4	4.50	8.06	.175	1.61	281
5	5.56	8.06	.175	1.08	355
6	6.63	10.07	.175	1.55	478
8	8.63	12.52	.175	1.77	708
10	10.75	14.16	.175	1.53	998
12	12.75	15.98	.175	1.44	1,176
14	14.00	17.95	.175	1.80	1,412
16	16.00	19.94	.200	1.77	1,681

NOTE: All dimensions are in inches unless noted.

PRE-INSULATED WELD-TITE® PIPE

- (A) STEEL CARRIER PIPE
- (B) END SEAL
- (C) POLYURETHANE INSULATION
- (D) HDPE CASING
- (E) ANCHOR PLATE
- (F) FRP OVERWRAP

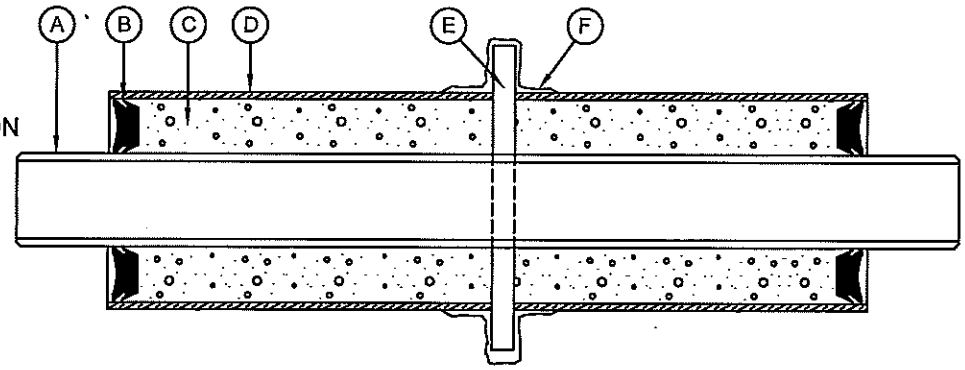

MID-POINT ANCHOR
NO SCALE

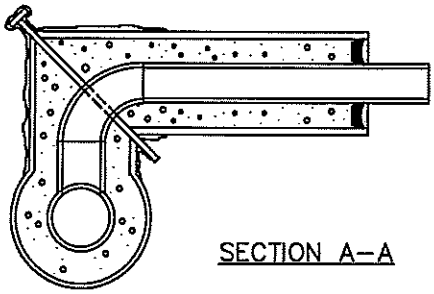

SECTION A–A

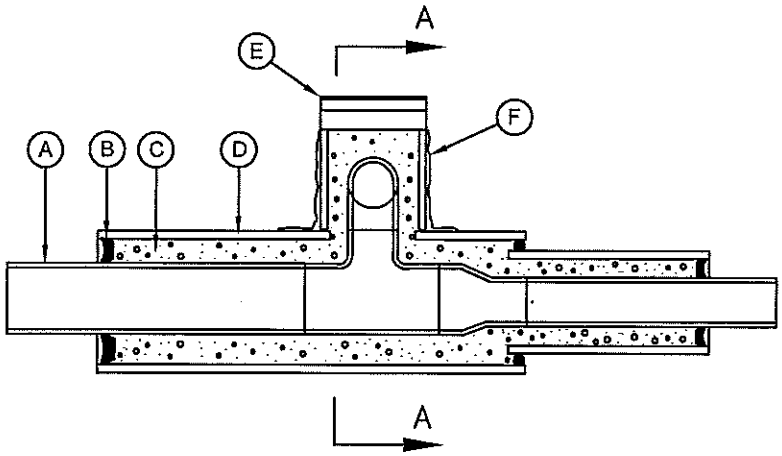

CROSSOVER TEE
NO SCALE

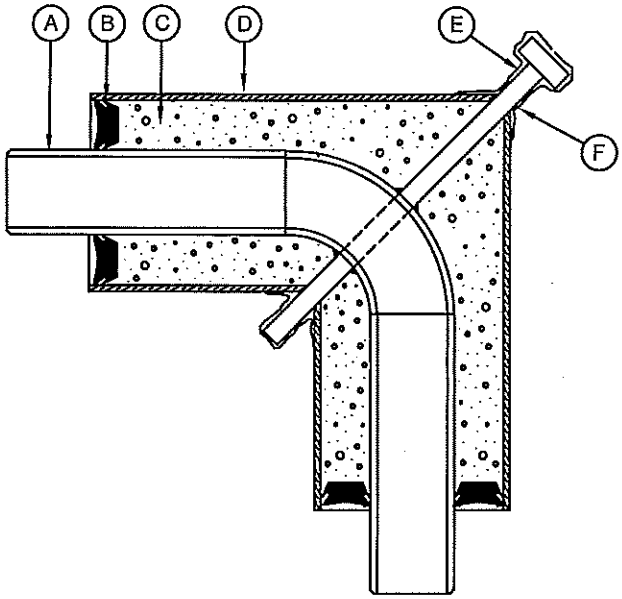

90° ELBOW WITH ANCHOR
NO SCALE

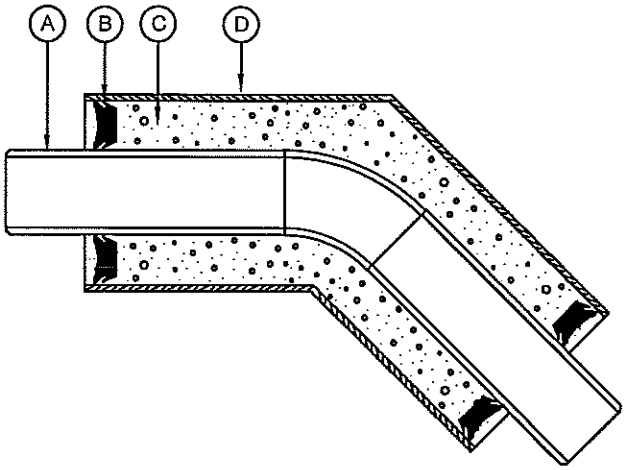

45° ELBOW WITHOUT ANCHOR
NO SCALE

PRE-INSULATED WELD-TITE® PIPE

- (A) STEEL CARRIER PIPE
- (B) POLYURETHANE INSULATION
- (C) HDPE CASING
- (D) MINERAL WOOL OR ECOTHERM INSULATION
- (E) GUIDE
- (F) END SEAL

SECTION A–A

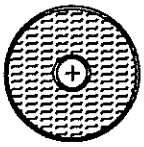

SECTION B–B

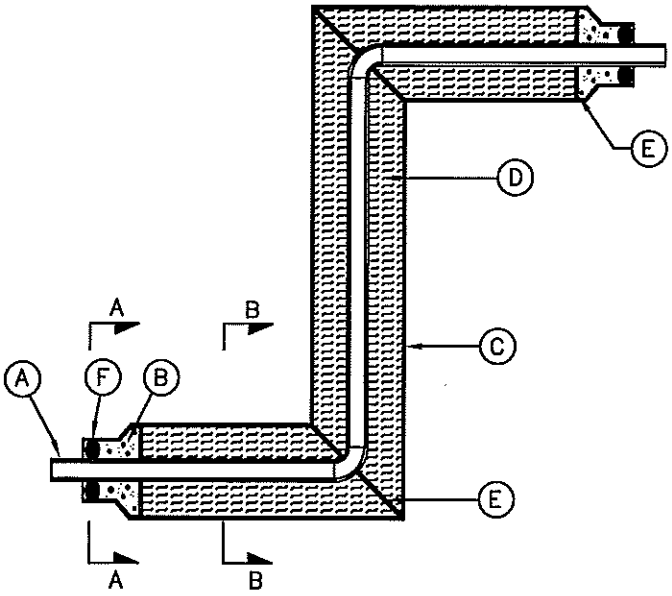

EXPANSION 'Z' BEND DETAIL
NO SCALE

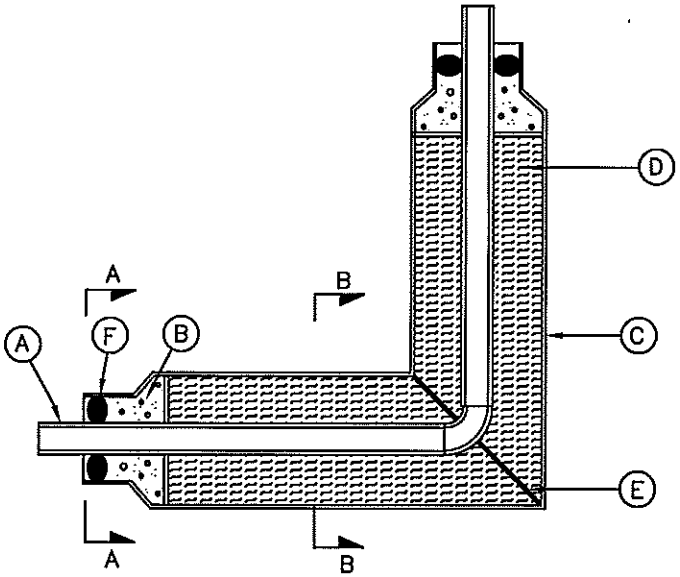

EXPANSION ELBOW DETAIL
NO SCALE

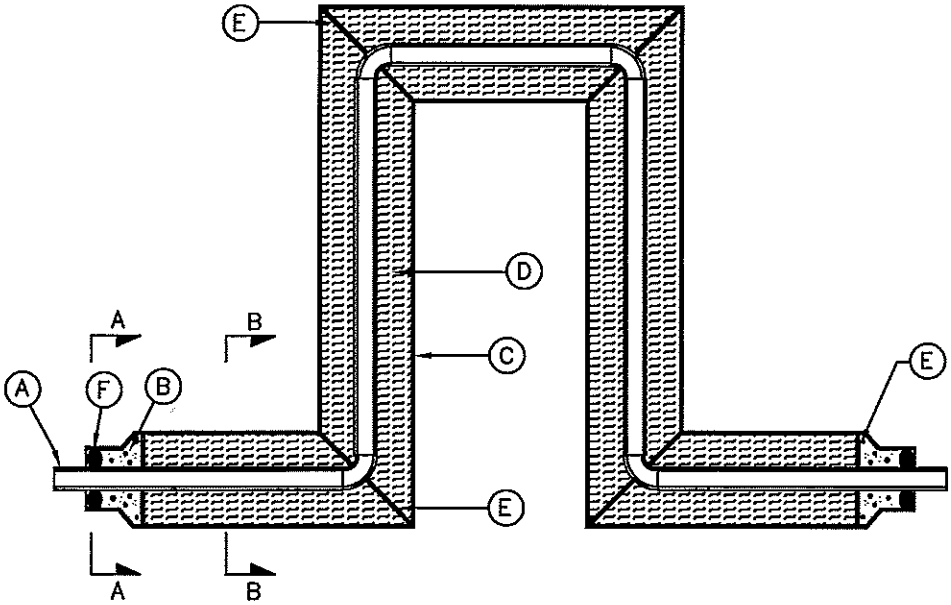

EXPANSION LOOP DETAIL
NO SCALE

10/04

WELD-TITE INSTALLATION SPECIFICATION

GENERAL: Installation of the WELD-TITE piping system shall be done in accordance with the appropriate publications including ANSI B31.1 and the following specifications and instructions. A Thermal Pipe Systems, Inc. field representative may conduct an installation clinic to pre-qualify contract personnel in the proper procedures for the installation.

Piping shall be accurately cut to dimensions established at the construction site and shall be worked into place without springing or forcing, properly clearing all openings and equipment. Excessive cutting or other weakening of structural members to facilitate piping installation shall not be permitted. Pipe ends shall have burrs removed by reaming and shall be installed to permit free expansion and contraction without damage to joints. Good workmanlike procedures shall be followed.

All piping, unless otherwise indicated, shall be pitched with a grade of not less than 1 inch in 40 feet toward the drain points where applicable.

Open ends of pipe lines and equipment shall be properly capped or plugged during installation to keep dirt or other foreign matter out of the system.

RECEIVING AND HANDLING SHIPMENTS

INSPECTION: Each shipment shall be inspected upon its arrival at the site. The products are carefully loaded at the plant using methods acceptable to the carrier and it is his responsibility to deliver the pipe in good condition. It is the responsibility of the installation contractor to ascertain whether there has been any loss or damage. The carrier is the contractor's agent. The contractor shall report any pipe or equipment that arrives damaged or is lost in shipment.

Make overall inspection of the load. If load is intact, ordinary inspection while unloading should be enough to make sure that the pipe has arrived in good condition. It is the responsibility of the receiver to make certain that there has been no loss or damage. Note specifically that any end packaging should not show signs of damage. If the load has shifted, or end packing is damaged, then each piece must be carefully inspected for damage. Specifically the ends should be inspected for scars, nicks, etc. Other obvious damage is also cause for rejection. Check total quantities of each item against the tally sheet (pipe, fittings, etc.) Any damaged or missing items are to be noted on the delivery receipt and the receipt returned to the carrier. Notify the carrier immediately and make claim in accordance with the carrier's instructions. Thermal Pipe Systems, Inc. will assist, if necessary, in handling this claim. Do not dispose of damaged material - the carrier will notify you of the procedure to follow.

UNLOADING INSTRUCTIONS: The means by which the pipes are unloaded in the field is the decision and responsibility of the installing contractor. The use of forklift type equipment frequently simplifies and speeds up the unloading of larger sizes and usually provides extra protection against damage in handling. To prevent the possibility of the core pipe from shifting within the casing pipe, do not stand a length on one end or raise it vertically. Under no condition should a pipe be dragged along the ground. Do not lift fittings or pipe by inserting a bar, pipe, etc., inside of the core. Damage to the pipe may result. If any pipe is damaged in unloading and handling, mark the damaged area and set it aside. Thermal Pipe Systems, Inc. Representative will determine whether damaged casing can be repaired in the field and will determine exact method for repair and instruct contractor in making repair.

STORAGE: Store pipe on a flat surface so as to support the barrel evenly. Store random lengths separately where they will be readily available. Individual lengths of pipe should be stacked in piles no higher than 5 feet.

LOADING TRANSFER TRUCKS: Use trucks with long bodies so that pipe lengths do not overhang. Make certain truck bed is smooth, without cross-strips, bolt heads, or other protrusions that could damage the pipe. Short body trucks may be used if fitted with racks that properly support the pipe in a horizontal position. The rack should support the pipe with supports spaced every 3 feet or less along the pipe lengths. Pad the contact areas to avoid damage to the pipe.

EXCAVATION: Excavation should take into account the need for the thrust blocks at all fittings, which are directly buried in the ground. The trench bottom must give uniform support along the entire length of any pipelines. Where several pipelines are located in a common trench, the trench must be wide enough to maintain the specified distances between adjacent lines, generally a minimum of 6" in pipe sizes up to 6" diameter, and 12" minimum in sizes 8" and larger. The excavation should be in a straight line.

TRENCHING: Trenching shall follow the elevations provided by the Design Engineer on the contract drawings. The trench depth should always allow for a minimum cover height of 24" over the top of the casing. Keep excavations free from water during construction. If the contractor determines it is necessary to remove unsuitable material to a depth greater than specified, refill over excavated area to the proper depth with specified bedding material and compact in 6 inch lifts to 95 percent of maximum density in accordance with ASTM D1557, Method D. Excavate and replace soil disturbed and weakened by the contractor's operations or soils permitted to soften from exposure to weather, with bedding material and compact with a plate-type vibratory compactor.

TRENCH WIDTHS: The width of the trench at the top of the pipe should be held to the minimum required for efficient and proper installation. The reason for this is to keep the earth load on the pipe as small as possible. The wider the trench at the top of the pipe, the greater the load on the pipe. Note that an increase in trench width above the top of the pipe, by stepping the sides or digging a wider offset trench, does not affect the earth load on the pipe. On the other hand, a trench that is too narrow will make assembly difficult and may reduce the rate and quality of installation. In addition, lack of ample room will limit the capability to properly backfill and tamp around the pipe. Although each job or portion of a job must be considered on an individual basis, as a general rule, the following minimum trench widths at the top of the pipe are recommended: Minimum: one foot greater than the outside diameter of the casing. Where two or more pipes are in the same trench, use the distance between outside casing of the outside pipes plus one foot. Maximum: Use above method for minimum plus two feet.

DISTRIBUTING PIPE ALONG TRENCH: Pipe lengths may be strung along the line of the trench so as to minimize additional handling during installation.

PLACING PIPE IN THE TRENCH: The WELD-TITE pipe can be hand or mechanically passed into the trench. The latest state and federal safety regulations should be understood and observed. If slings are necessary use only canvas straps, do not use cable or chain slings. A backhoe or boom truck provides an excellent way of lowering the pipe into the trench.

BEDDING: Bedding material should be sand or other materials free of sharp objects, heavy clods, boulders or frozen lumps as specified by the Design Engineer. The approved bedding should be used 6" under, around, and over the pipe. Utilize good practices that apply to buried pressure piping.

ASSEMBLY OF HDPE SLEEVE: Prior to installing the next section of pipe, the HDPE Sleeve should be split lengthwise and installed onto this piece. Simply position the sleeve over the casing and slide it all the way on by hand.

WELDING: End covers should remain in place until welding operations are ready to begin. Welding in trenches should be minimized. Welding procedures shall be in accordance with contract specifications, ANSI B31.1, and good welding practices.

TESTING: All carrier pipe welds shall be tested in accordance with the contract specifications. If no test is specified, test should consist of a hydrostatic test of 150 psi or 1 ½ times working pressure, which ever is greater, for a period of two hours.

FIELD CUTTING PIPE TO A SPECIFIC LENGTH

Determine the exact length of carrier pipe needed. Mark the casing at this point. Measure back 6 inches on both sides and mark the casing at these points using a wrap-around.

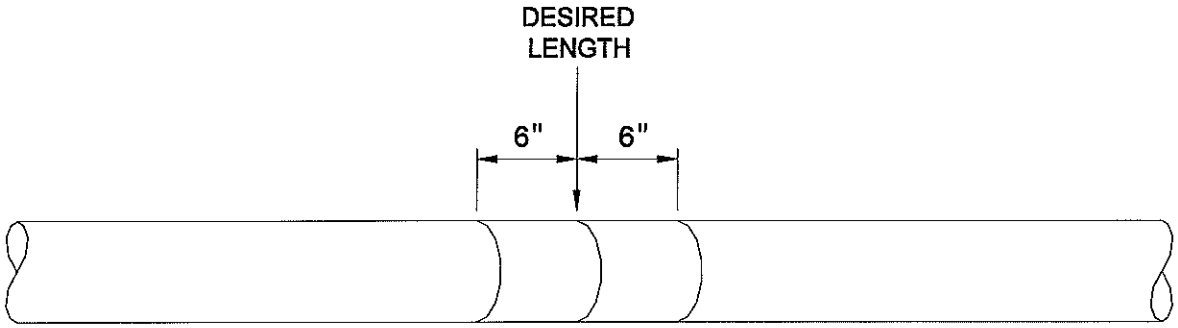

Use a fine tooth carpenters handsaw or hack saw to cut the HDPE casing. Remove the HDPE casing and cut off the insulation. Be careful not to damage steel carrier pipe during this operation. See illustration below.

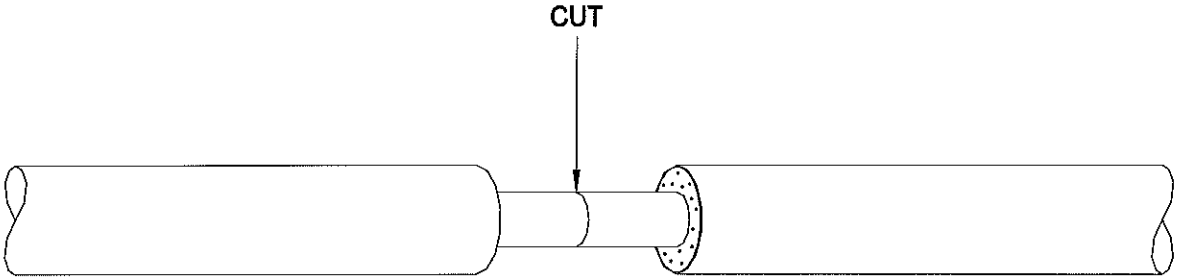

Mark, cut, and bevel the steel pipe at the desired length. Make sure cut is square. Remove any burrs and ridges on the pipe. Using a utility knife, remove the insulation between the casing and the carrier pipe one inch in from the face of the HDPE casing as shown below. Insert the rubber end seal between the casing and the carrier pipe using the handle of a hammer or screwdriver to push the seal all the way. Silicone caulking may be used in lieu of the rubber end seal.

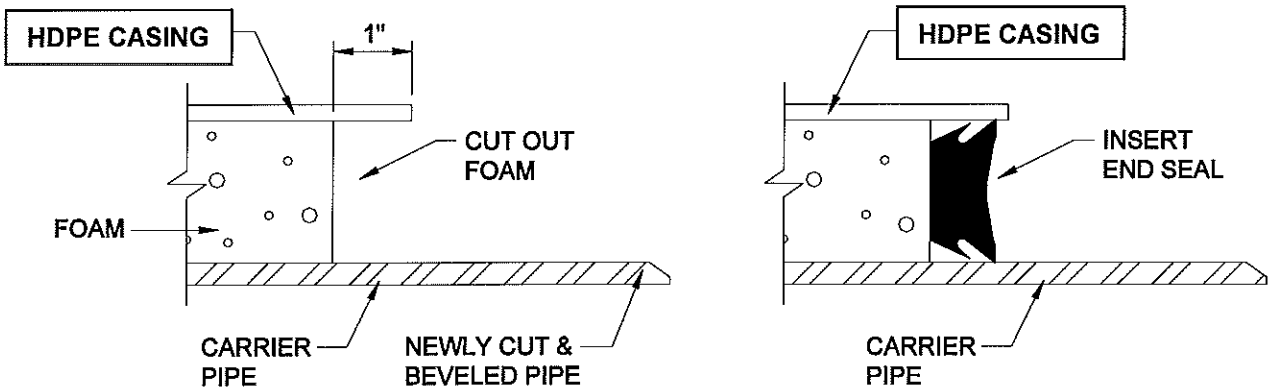

INSULATE FIELD JOINTS: After successful testing of carrier pipe joints, the welded joints should be insulated using material supplied by Thermal Pipe Systems, Inc.

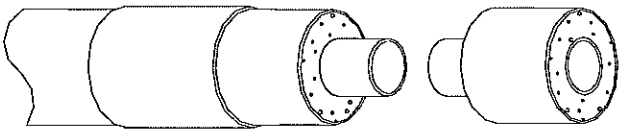

1. Slide split HDPE sleeve on

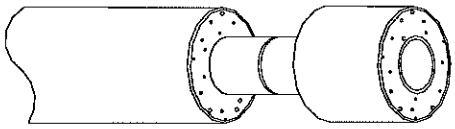

2. Weld carrier pipe

First slide on split HDPE sleeve over one end of pipe. Next, weld carrier pipes together. Then attach polyurethane half shells using 32 gauge stainless steel straps and push HDPE sleeve over insulated joint so that it is positioned evenly. Apply the factory supplied heat shrink sleeve over the sleeve and casing pipe. The field applied heat shrink sleeve should extend 6″ on each side of joint.

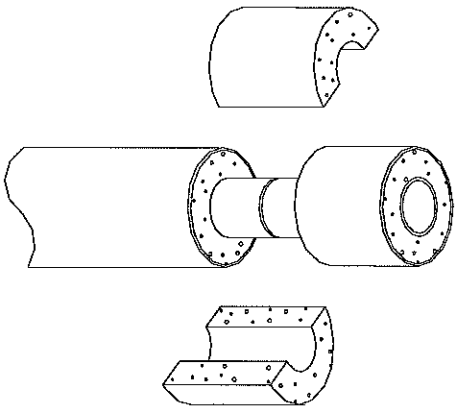

3. Apply foam half shells

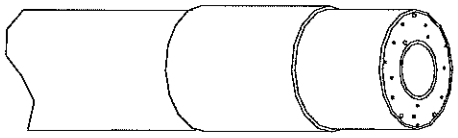

4. Slip HDPE sleeve over insulated joint

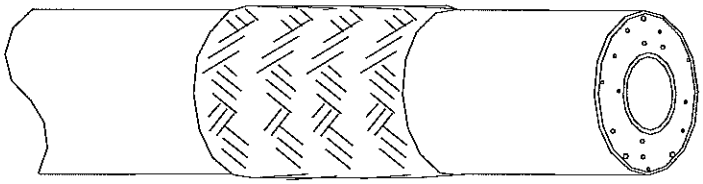

5. Apply heat shrink sleeve

BACKFILLING: Backfilling of trenches shall progress as rapidly as construction, testing, and acceptance of work permits. Uniformly compact and grade bottom of trenches. After installation of pipe and bedding material, backfill as follows: place initial backfill in layers to a depth of 12 inches over the top of the initial bedding. Compact the material to a density equivalent to the surrounding undisturbed soil or to 90 percent of maximum density (ASTM D1557, Method D), whichever is greater. Backfill remainder of trench in one-foot lifts and compact to 90 percent maximum density (ASTM D1557, Method D). For trenches excavated in roads, streets, or located under structures, place backfill in 6-inch layers to top of trench and compact each layer to at least 95 percent maximum density (ASTM D1557, Method D).

START UP PROCEDURE: Start up procedure shall conform to generally accepted practices and be done in a workman like manner. The line shall be filled slowly from any available low-pressure source. The water can be introduced from lines in service directly through valved connections or by temporary connections to taps made in the new line. If possible, all such connections should be made at the lowest point in the line to avoid air entrapment. All valves and other control points in the line that are open as the line filling begins should be closed gradually to avoid the possibility of water hammer.